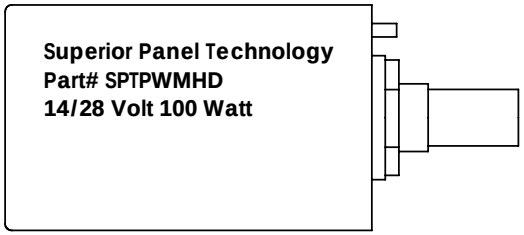

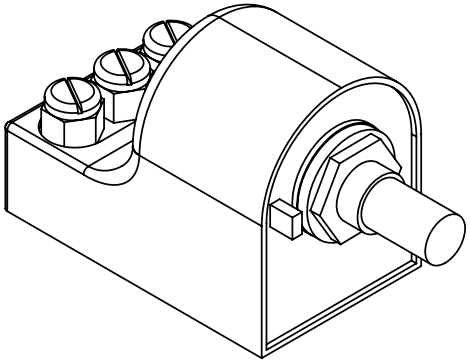

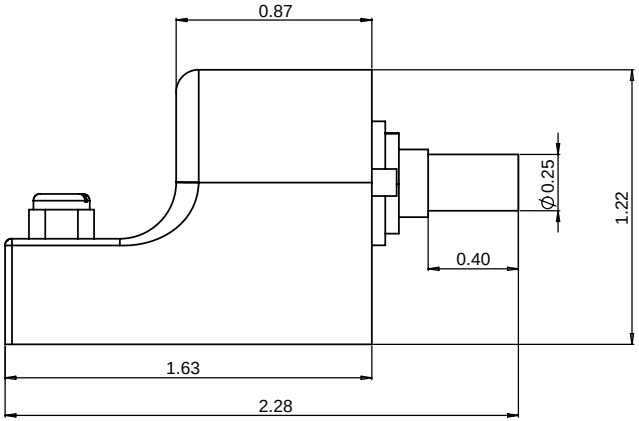

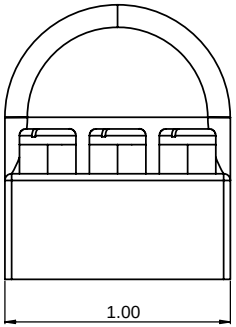

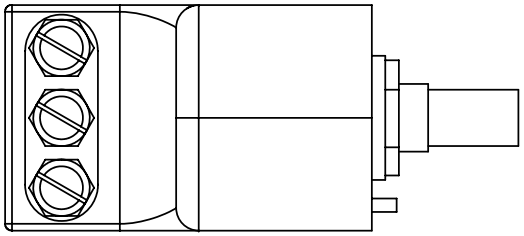

UNLESS OTHERWISE SPECIFIED:
DIMENSIONS ARE IN INCHES
TOLERANCES:
FRACTIONAL ±
ANGULAR: ±
TWO PLACE DECIMAL ±
THREE PLACE DECIMAL ±
INTERPRET GEOMETRIC TOLERANCING PER:
MATERIAL
FINISH
DO NOT SCALE DRAWING
REVISION

SUPERIOR PANEL TECHNOLOGY

PWM DIMMER

Part3

A1

SCALE: 1:1 WEIGHT: SHEET 1 OF 1