VOR/LOC/GS • CI 205-3

Frequency • 108-118 MHz (VOR/LOC)
329-335 MHz (GS)

VOR/LOC/GS high performance navigation antenna set. Designed for mounting on the aircraft vertical stabilizer or helicopter tail boom. Features low weight/drag, tabular structure to minimize helicopter rotor “down wash” forces. Contains wide band/high efficiency electrical performance and DC grounding for lightning protection.

Set includes a pair (2) of “towel bar” sensor elements each with a BNC output connector and a one-piece dual coax interconnect signal combiner harness with single BNC connector output. Provides for a single cable run to the avionics location.

MODEL - CI 205-3	
Electrical	
Frequency	108-118 MHz (VOR/LOC) 329-335 MHz (GS)
VSWR	5.0:1 Max. 108-118 MHz (VOR/LOC) 5.0:1 Max. 329-335 MHz (GS)
Polarization	Horizontal
Radiation Pattern	Omni Directional
Impedance RF	50 Ohms Nominal
Power RF	Receive Only
Mechanical	
Weight	1.75 lbs. Maximum
Material	Delrin mounts / Aluminum “Towel Bar”
Finish	Polyurethane Enamel
Connector	BNC (Female)
Environmental	
Temperature	-55 C to +85 C
Altitude	50,000 ft
Airspeed	300 Knots TAS @ 25,000 ft.
Federal Specifications	
FAA TSO	C34e, C36e, C40c
RTCA Environmental	DO-160D

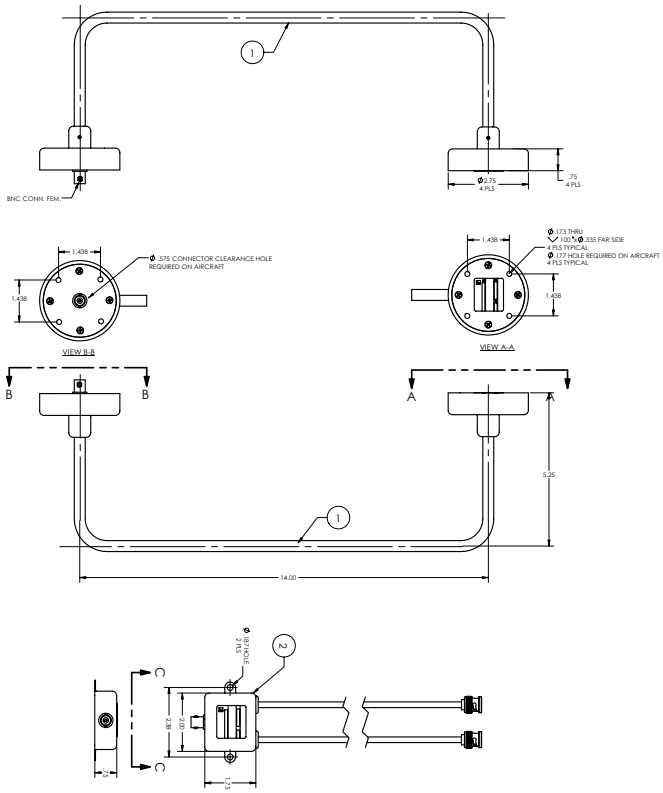

Warning: Drawing not to scale. Use factory supplied drawings and specifications for installation. Refer to FAA AC 43.13-2A for installation guidelines. © 2007 Comant Industries, Inc. Patented. Other Patents Pending.